F. かま関係 / Rotary hook mechanism

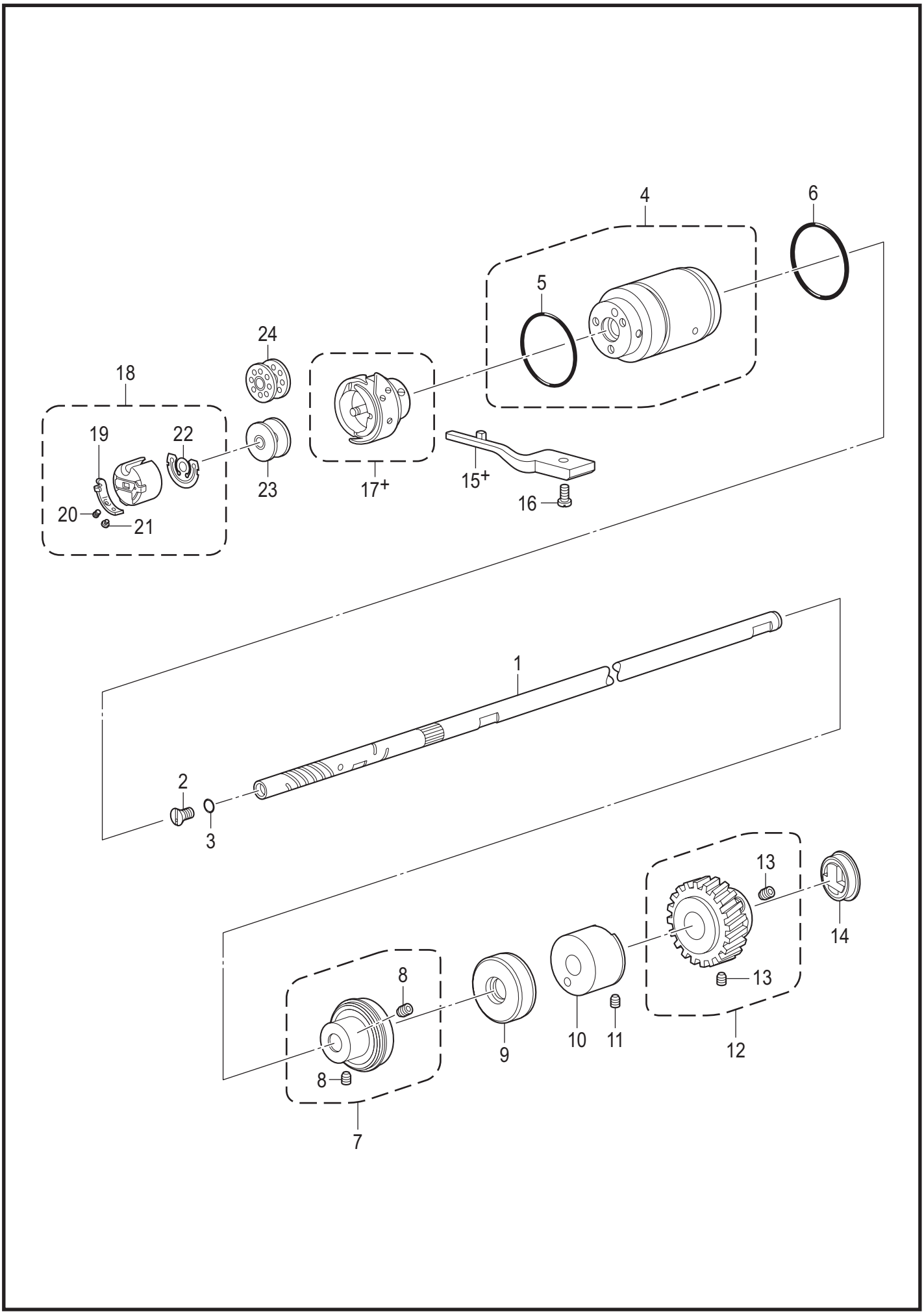

S-7300A-301