B. 針棒・天秤関係 / Needle bar and thread take-up mechanism

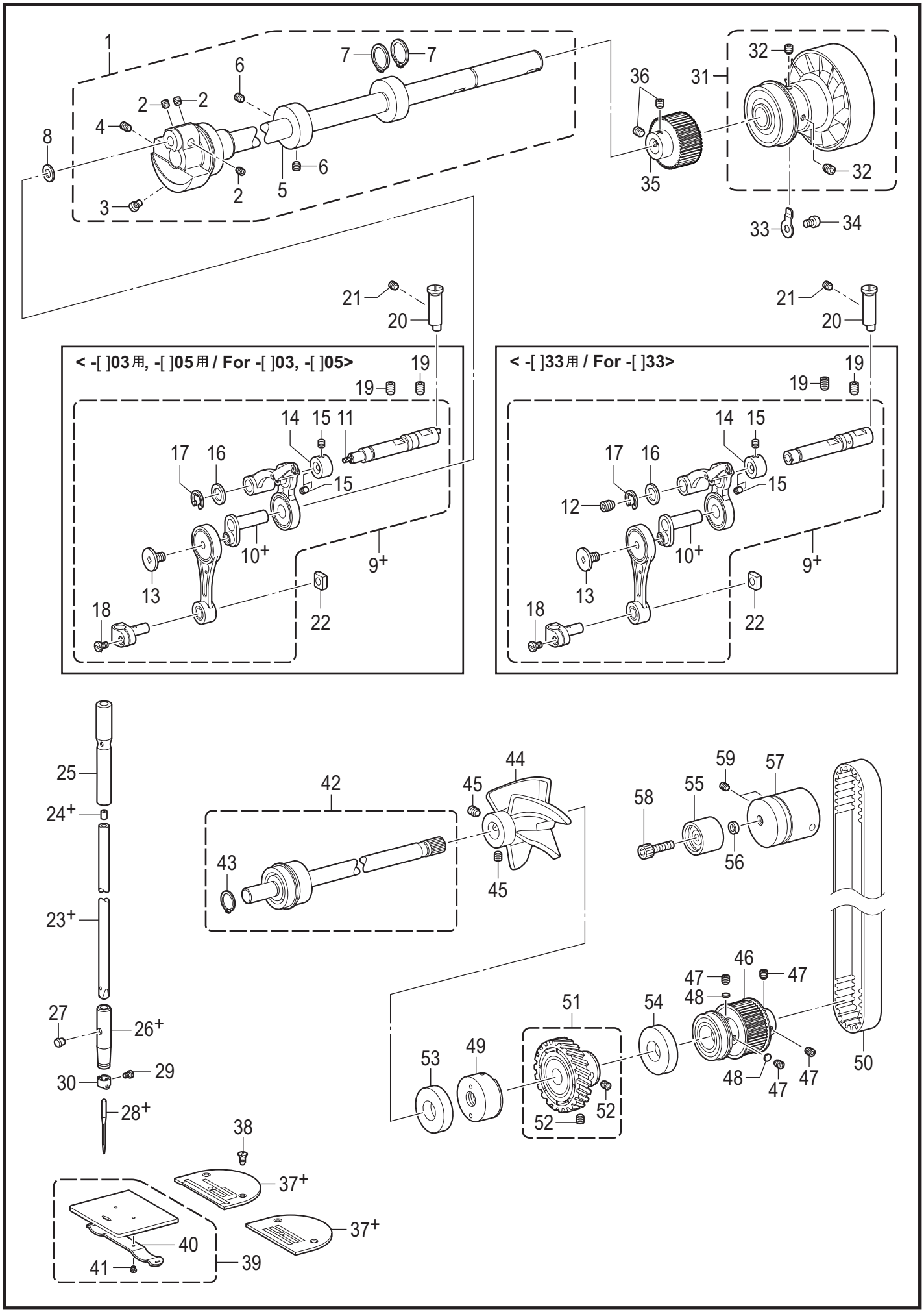

S-7300A-101